Liquid Roofing Systems Ltd
Prees Green
Shropshire
SY13 2BN
Tel: 01948 841 877
Fax: 01948 841 854
Web: lrs-systems.co.uk

Installation Manual

STANDARD FASTCOAT SYSTEM

LRS Waterproofing Systems

High Performance Cold Liquid Applied Roofing System

Liquid Roofing Systems Ltd
Prees Green
Shropshire
SY13 2BN
Tel: 01948 841 877
Fax: 01948 841 854
Web: lrs-systems.co.uk

CONTENTS

Liquid Roofing Systems Ltd
Prees Green
Shropshire
SY13 2BN
Tel: 01948 841 877
Fax: 01948 841 854
Web: lrs-systems.co.uk

ABOUT LRS SEAMLESS WATERPROOFING SYSTEMS.

LRS Seamless Waterproofing Systems have been manufacturing cold liquid applied liquid waterproofing membranes in the UK for over 12 years.

With sales in over 50 countries of the 5 continents, and an extensive R&D activity, the company designs and produces its own Polyurethane, Polyurea, PMMA, and Liquid Rubber systems through several technologies:

Single and two component cold applied Polyurethane membranes.
Two component hot spray applied Polyurethanes, Polyureas (both pure and hybrid) and Polyaspartics.

Two component waterborne Polyurethane and Epoxy resins for indoor (VOC Free) applications.

Rapid Curing two component PMMA resin systems for waterproofing roofs, terraces, balconies, gutters and cut edge lap treatment.

LRS supports its customers all the way, from designing the right solution for every project, to accreditation and certification of each system by recognized laboratories, and finally with an on-site presence during project execution and quality control at the end of it to ensure customers' satisfaction and peace of mind.

Liquid Roofing Systems Ltd
Prees Green
Shropshire
SY13 2BN
Tel: 01948 841 877
Fax: 01948 841 854
Web: lrs-systems.co.uk

SUMMARY OF STANDARD LIQUID COLD-APPLIED WATERPROOFING SYSTEMS IN UK

Following steps are needed for a correct implementation of a liquid cold applied waterproofing system:

Treatment of the surface. Should be clean, repaired (cracks, loose materials...) even and dry.
Primer (not always required). Choice depends on surface condition, its nature and the requirements of the project.

Detailing (Normally resin reinforced).

Application of the main liquid waterproofing membrane. Normally 2 kg/m2 in one or two layers, depending on the requirements of the system and/or each project.

Aliphatic top coat: protective/decorative/anti-skid (where required).

Table of systems in UK: Standard FASTCOAT, FASTCOAT System and FASTCOAT 2K M (solvent free) System

Step	**STANDARD FASTCOAT**	**FASTCOAT System**	**FASTCOAT 2K M (solvent free) system**
A)	TREATMENT OF THE SURFACE, REPAIR CRACKS & FISSURES (RAYSTON FLEX), FILL UP HOLES…		
B)	PRIMER (HUMIDITY PRIMER, POROSITY SEALER, PU PRIMER…)		
C)	DETAILS (RESIN REINFORCED)		
D.1)	FASTCOAT, 1 kg/m2, reinforced (First layer)	FASTCOAT, 1 kg/m2, reinforced (First layer)	FASTCOAT 2K M reinforced with GEOMAX (wet-on-wet), 2 kg/m2
D.2)	FASTCOAT, 1 kg/m2 (Second layer)	FASTCOAT, 1 kg/m2 (Second layer)	
E)	COLODUR + Color Paste, 0,3 kg/m2	*(No need for aliphatic top coat as FASTCOAT is already aliphatic)*	IMPERTRANS ECO, 0,3 kg/m2

Advantages of FASTCOAT as a second thick layer (and protective top coat) over FASTCOAT (applied as a second layer)

Liquid Roofing Systems Ltd
Prees Green
Shropshire
SY13 2BN
Tel: 01948 841 877
Fax: 01948 841 854
Web: lrs-systems.co.uk

FASTCOAT is an aliphatic resin, has very good UV and outdoors resistance. Very long colour stability.

With FASTCOAT the application can be speed up because a further UV protective top coat is not needed.

Shower-proof and waterproof shortly after application.

No CO2 is released when cured by an indirect FASTCOAT Seamless Waterproofing Systems reaction induced by the moisture of the air. Lower risk of undesirable blistering.

FASTCOAT (white) has an independent “cool roof” certificate.

Advantages of FASTCOAT 2K M system

Solvent free, low VOC system.

Can be applied wet-on-wet, about 2 kg/m2 in a single layer. So the installation is quicker when the system is applied.

INSTALLATION MANUAL: STANDARD FASTCOAT SYSTEM

3.1) Installation overview;

The FASTCOAT high performance liquid applied roofing systems meet most budgets and performance requirements, with a 25-year expected durability and 20 year guarantee (following BBA and ETA certificates of the product).
Main liquid applied resins in the system are:
Primers; are required to seal the substrate and extend product coverage. Specified primers vary dependent upon substrate type & condition and are not always required. Please refer to the Ancillary product section (3.4.1), for a detailed over view on primers available, application rates and product information.

FASTCOAT, quick curing; a single component, semi thixotropic cold applied polyurethane resin that cures by Seamless Waterproofing Systems reaction with the moisture from the air. UV and outdoor stable, however the colour is not UV stable.

Prior to the FASTCOAT installation the roof must be fully prepared, cleaned and primed, if required, in accordance with LRS recommendations.

FASTCOAT base coat (first layer) is applied at the required coverage rate (1.0kg / m²) dependent upon the system. Is reinforced with 100gsm polyester reinforcement that is fully embedded into the wet base coat. FASTCOAT (second layer) is then applied over the cured base coat, coverage rates vary upon the system required.

Liquid Roofing Systems Ltd
Prees Green
Shropshire
SY13 2BN
Tel: 01948 841 877
Fax: 01948 841 854
Web: lrs-systems.co.uk

Is recommended to apply the FASTCOAT base coat (first layer) and the FASTCOAT second layer in different colours.

Protective over coats are available for walk ways, maintenance routes or when a colour stable finish is required.

FASTCOAT is available as a roof overlay (cold roof), a warm roof or as an inverted roof installation where compliance to current building regulations is required. All installations are cold applied. This eliminates the need for any gas torches or bitumen boilers, thus reducing the risk to health and safety.

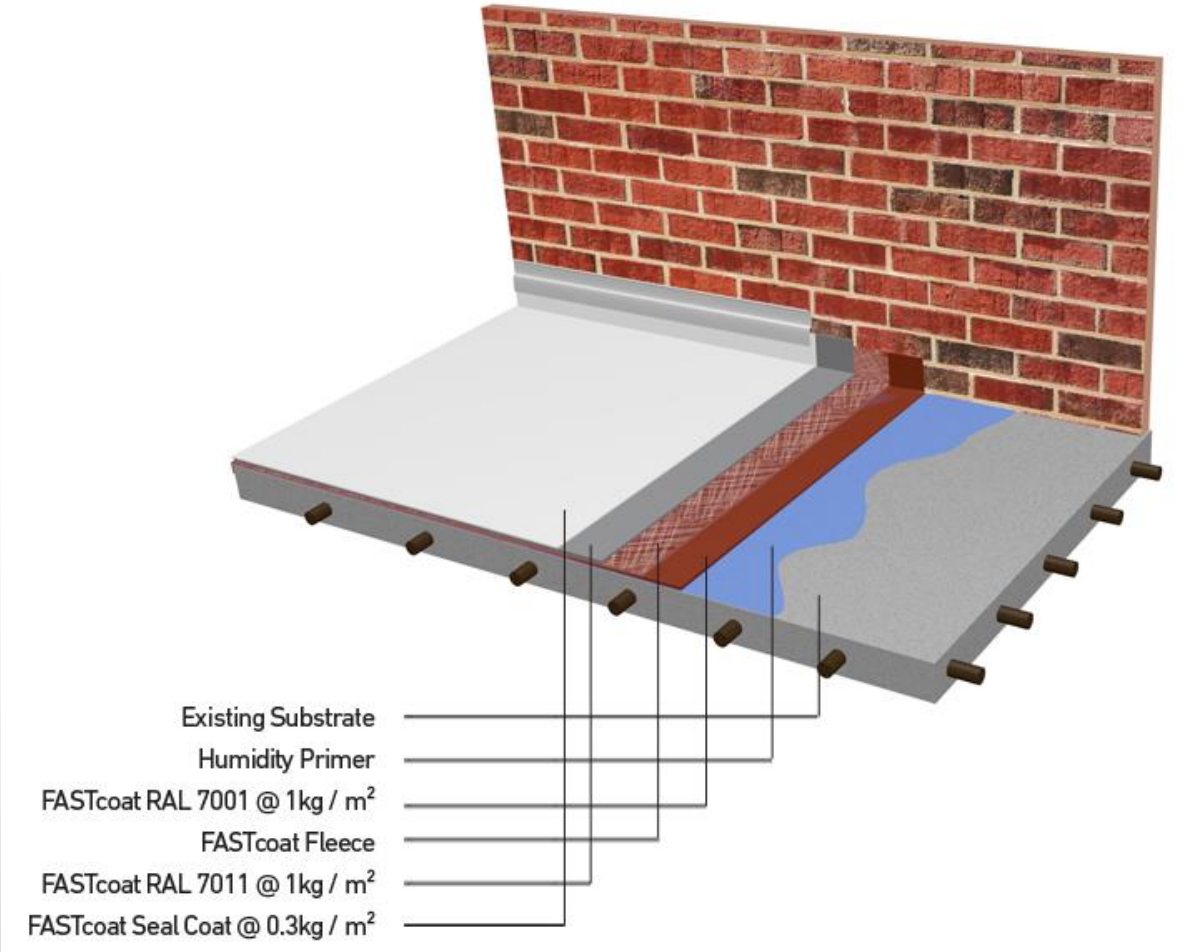

Liquid Roofing Systems Ltd
Prees Green
Shropshire
SY13 2BN
Tel: 01948 841 877
Fax: 01948 841 854
Web: lrs-systems.co.uk

Typical Coverage Rate Table (Flat Roof area);

	Standard FASTCOAT system **25 year expected durability (BBA and ETA certificates)**	
Main certificates	BBA 15/52 3 ETA / CE	
Container Size	25 kg.	
Colours Available	Light grey (RAL 7001), black and dark grey (RAL 7011). Other colours may be supplied; a minimum order size may apply.	
Substrate condition	Smooth	Rough
Primer	If Required	
Base Coat FASTCOAT	1 kg/m² (smooth surface)	1.25 kg/m² (rough surface)
Reinforcement	150 gsm fibreglass reinforcement	150 gsm fibreglass reinforcement
Second layer FASTCOAT	1 kg/m²	1 kg/m²

Liquid Roofing Systems Ltd
Prees Green
Shropshire
SY13 2BN
Tel: 01948 841 877
Fax: 01948 841 854
Web: lrs-systems.co.uk

Standard FASTCOAT system;

- 25 Year expected durability - BBA
- 20 Year Guarantee
- Main certificates; BBA (15/523)
- Container Size; 25 kg.
- Colours Available; Light grey (RAL 7001), black and dark grey (RAL 7011). Other colours may be supplied; a minimum order size may apply.
- Substrate condition; Smooth or Rough
- Primer if Required @ up to 0.15kg / m²
- Base Coat
- FASTCOAT
- 1 kg/m² (smooth surface)
- 1.25 kg/m² (rough surface)
- Reinforcement 100 GSM Polyester Reinforcement 100 GSM Polyester Reinforcement
- Second layer
- FASTCOAT
- 1 kg/m²

All coverage rates stated are quoted as a minimum. Coverage rates adequate to meet product certificates.

3.2) Pre-Installation Notes;

The specified LRS FASTCOAT system is only to be laid by a roofing contractor trained or approved by LRS Seamless Waterproofing Systems' Technical department.
Before works commence, the installing roofing contractor should ensure that the surfaces to receive the new roofing system are acceptable and comply with LRS Seamless Waterproofing Systems recommendations and that the application of the specified coating conforms to the requirements of the specification.

Retained components from the existing structure must be sound and capable of accepting the imposed loading of the new roofing system and associated installation procedures.
Surfaces must be clean and dry, free from any organics, dust and any other loose materials. New concrete must be well-cured. Defects and sharp projections should be removed or made good and the entire surface must be compatible with the proposed coating system.

Works are to be organised to maintain the waterproofing integrity of the roofing system and to ensure that the finished roof areas are adequately protected from damage by subsequent building operations.

Liquid Roofing Systems Ltd
Prees Green
Shropshire
SY13 2BN
Tel: 01948 841 877
Fax: 01948 841 854
Web: lrs-systems.co.uk

Do not undertake work in wet conditions, the temperature must be 3° degrees higher than the dew point. The installer must assess the temperature on the system application day. Application of the system should not take place when wet conditions prevail, or when condensation is present or will be present on the substrate during application. Unless effective temporary covering is provided, suspend work in severe or continuous wet weather or where wind speeds exceed 7m/s. Temperature should always be above 5°C and rising.

For specific specified materials and installation requirements please refer to the LRS Seamless Waterproofing Systems Technical Services specification and associated build up drawings and specified detail drawings.

3.3) Main components

3.3.1) FASTCOAT for Base Coat (first layer) ;

FASTCOAT is a cold liquid applied, high performance, high build polyurethane coating for use on most roof surfaces including asphalt, bituminous felt, concrete, single ply and metal surfaces. This forms the first coat for the STANDARD FASTCOAT liquid applied roofing system.

FASTCOAT is a viscous, semi Thixotropic, high solids liquid polyurethane that cures with the moisture in the air to form a seamless and durable waterproofing coating. It also contains an accelerant that reduces significantly its curing time against standard single component polyurethane.

Thoroughly mix FASTCOAT using a paddle mixer at a low rpm. Ensure the product is completely homogenous and then leave to rest to let excess air disperse before application. This can be checked by waiting until surface bubbles disappear in the drum. This will reduce the likelihood of pinhole formation in the membrane.

FASTCOAT should be applied by brush or short pile roller at a typical coverage rate of 1 kg/m2 on smooth roof surfaces and rising to 1.25 kg/m2 on rough roof surfaces. Coverage must be sufficient to fully embed and saturate the Polyester Reinforcement Mat before application of the top coat.

Cure times stated below are approximate. Specific onsite conditions (% relative humidity in the air, direct sun on the roof etc.) may cause variations with cure times.

Liquid Roofing Systems Ltd
Prees Green
Shropshire
SY13 2BN
Tel: 01948 841 877
Fax: 01948 841 854
Web: lrs-systems.co.uk

FASTCOAT QC (Base Coat, first layer)		
Container Size	25 Kg.	
Coverage rates (typical)	1 kg/m² (smooth surface)	25 m² / 25 kg. drum
	1.25 kg/m² (rough surface)	20 m² / 25 kg. drum
Allowance should be made for additional coverage rates for embedment of the reinforcement fabric at low temperatures		
Typical Drying Times at 15ºC	Touch Dry	3 hours
	Minimum over coating	4 hours
	Full Cure	7 Days

Detailing;

Upstand;

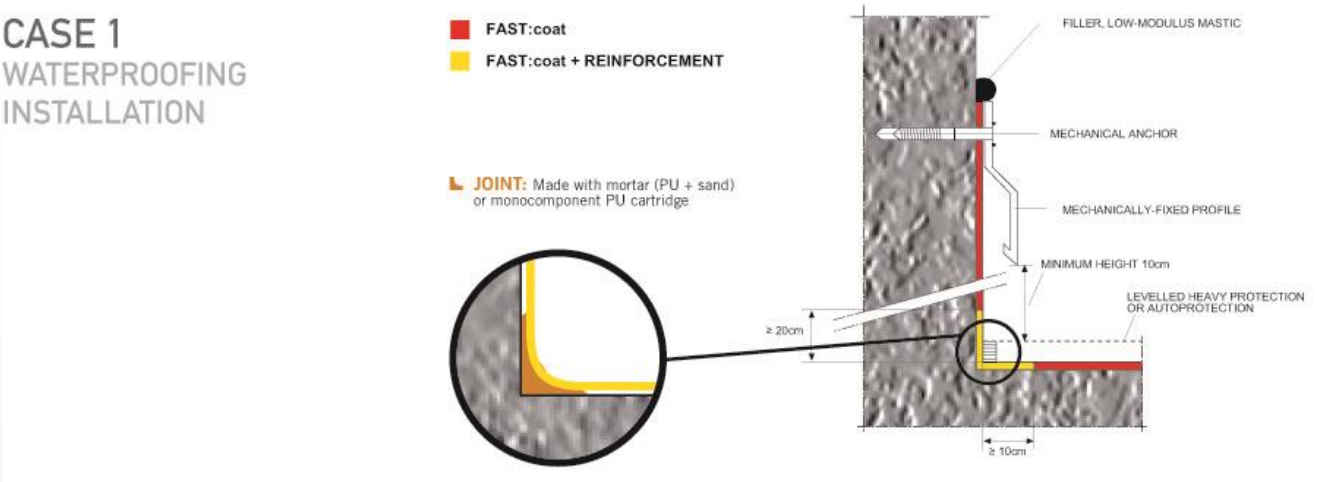

FASTCOAT should only be applied to structurally sound areas. Areas that do not meet this requirement must be treated accordingly to leave a substrate suitable for liquid application. Dirt, dust, organics and any other loose materials must be removed by scraping or brushing with a stiff bristle brush and power washing with a biocide wash before application of the first coat and detailing (for further information on recommended Biocide contact LRS Technical Support).

Project detailing is to be completed prior to the application of the base coat FASTCOAT. Please refer to section 3.7 for an overview of how to accurately dress areas of detailing.
Use a short pile mohair roller to apply and embed the polyester matting into the specified coverage of FASTCOAT.

Liquid Roofing Systems Ltd
Prees Green
Shropshire
SY13 2BN
Tel: 01948 841 877
Fax: 01948 841 854
Web: lrs-systems.co.uk

Ensure full coverage of the surfaces and monitor by taking wet and dry film thickness readings. The coating must maintain its thickness across all details including penetrations and abutments.

The reinforcement must be applied to follow the contours of the substrate making sure the reinforcement does not tent. If tenting does occur, realign the matting if possible to remove the crease or cut the length of the crease and allow the matting to fold over itself. Treat with FASTCOAT required ensuring full saturation.

Once cured, inspect the membrane for bubbles or fish mouths and any pinholes. If such areas are found, ensure they are cut back and lightly abraded to give a smooth finish. Pinholes should be treated with additional product and left to cure before application of the top coat.

Joint Detail;

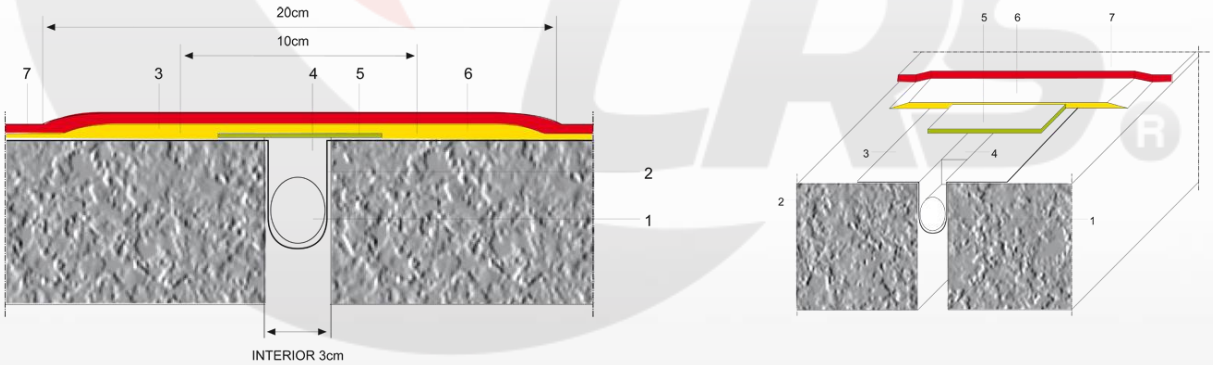

1. Backer rod (PE foam)
2. REINFORCEMENT
3. FAST:coat + REINFORCEMENT
4. Low modulus PU sealant
5. Spacer (PE)
6. FAST:coat + REINFORCEMENT
7. FAST:coat

Liquid Roofing Systems Ltd
Prees Green
Shropshire
SY13 2BN
Tel: 01948 841 877
Fax: 01948 841 854
Web: lrs-systems.co.uk

Fissure / cracks / split Detail;

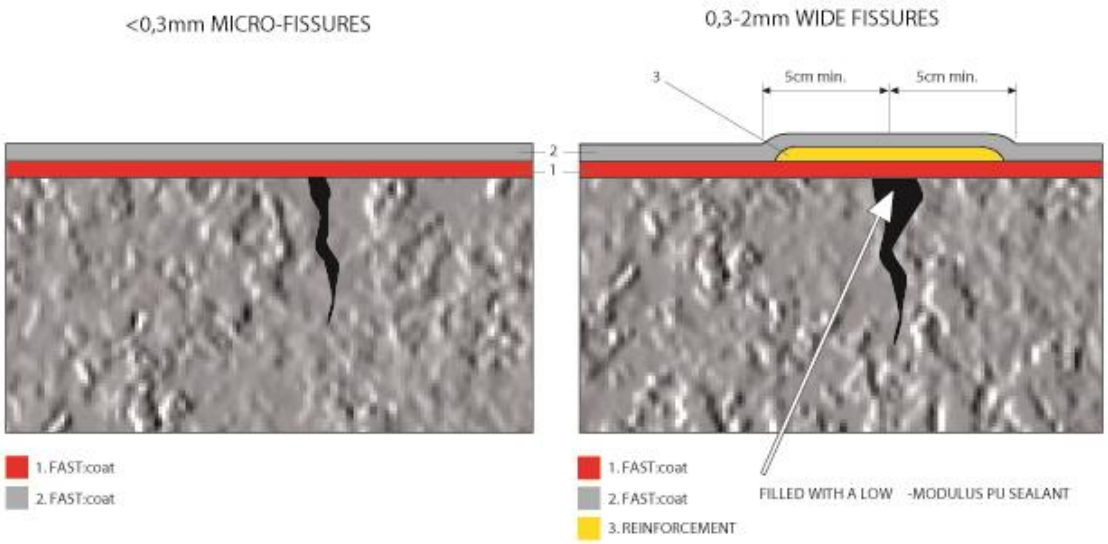

Rainwater Outlet detail;

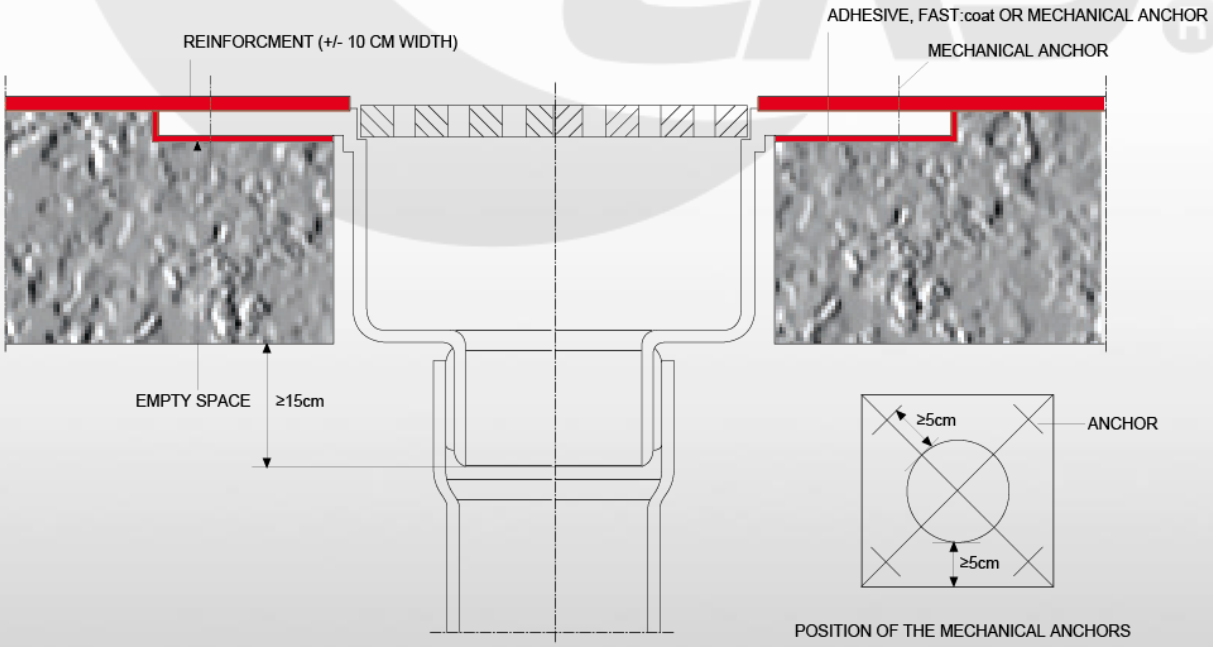

FAST:coat + REINFORCEMENT

Liquid Roofing Systems Ltd
Prees Green
Shropshire
SY13 2BN
Tel: 01948 841 877
Fax: 01948 841 854
Web: lrs-systems.co.uk

All materials must be stored undercover and storage areas must be kept out of direct sunlight and between 5°C and 25°C. Materials should never be exposed to freezing conditions or excessive temperature changes. Once opened, containers should be used completely. Typical unopened life expectancy for FASTCOAT is one year after its manufacturing date.

Rainfall;

If it begins to rain at any stage during application or if rainfall is imminent, stop work immediately. Reseal any open containers and store all equipment adequately to keep them dry. Work should not be resumed until it has completely stopped raining and the surface to be coated is completely dry and free from any sitting water. Preferably, works should be discontinued in advance of possible rainfall to allow the product to cure and be rainproof.

A curing membrane subject to rainfall is only aesthetically damaged. Rainfall can cause pits in the membrane but the quality of the membrane is not affected. These pitted areas should be overcoated accordingly to satisfy the aesthetics of the system.

3.3.2) FASTCOAT for second layer;

FASTCOAT is UV stable, however colour is not UV stable, the degree of change of colour under the UV radiation is different for each colour. Dark colours (dark grey) have fewer changes.

Thoroughly mix FASTCOAT using a paddle mixer at a low rpm. Ensure the product is completely homogenous and then leave to rest to let excess air disperse before application. This can be checked by waiting until surface bubbles disappear in the drum. This will reduce the likelihood of pinhole formation in the membrane.

Apply the FASTCOAT (second layer) when the base coat has fully cured. FASTCOAT (second layer) should be applied by brush or short pile mohair roller at a typical coverage rate of 1 kg/m2 dependent upon the system being installed. Ensure that the total roof area and base coat have been over coated with the top coat in accordance with the LRS Seamless Waterproofing Systems recommendations.

If the base coat has been exposed for more than 14 days, reactivate the surface using LRS solvent coat (after cleaning it) and afterwards apply PU Primer as specified at 100g/m2 with a clean rag or equivalent. Ensure the surface is completely clean, dust free with no sitting water before coating. For larger, flat areas, apply PU Primer with a roller at 100g/m2.

Liquid Roofing Systems Ltd
Prees Green
Shropshire
SY13 2BN
Tel: 01948 841 877
Fax: 01948 841 854
Web: lrs-systems.co.uk

Cure times stated below are approximate. Specific onsite conditions may cause variations with cure times.

FASTCOAT QC (second layer)		
Container Size	25 kg.	
Coverage Rates (typical)	1 kg/m²	25m² / 25 kg. drum
Typical Drying Times at 15ºC	Touch Dry	3 hours
	Minimum over coating	4 hours
	Full Cure	7 Days

Visually inspect the wet coating checking for defects such as pinholes, discontinuity and exposed matting. Undertake corrective measures as required.

Once cured, inspect the membrane for proud or fish mouths and any pinholes. Wicked and proud fibres should be cut back and lightly abraded to give a smooth finish. Pinholes should be treated with additional product and left to cure.

Image 2: FASTCOAT Dark Grey

Allow the membrane to fully cure before reinstating or installing any plant equipment onto the roof area.

Storage;

All materials must be stored undercover and storage areas must be kept between 5°C and 25°C. Materials should never be exposed to freezing conditions or excessive temperature changes. Once opened, containers should be used immediately. Unopened FASTCOAT can be used up to 12 months after the date of manufacture.

Liquid Roofing Systems Ltd
Prees Green
Shropshire
SY13 2BN
Tel: 01948 841 877
Fax: 01948 841 854
Web: lrs-systems.co.uk

Rainfall;

If it begins to rain at any stage during application or if rainfall is imminent, stop work immediately. Reseal any open containers and store all equipment adequately to keep them dry. Work should not be resumed until it has completely stopped raining and the surface to be coated is completely dry and free from any sitting water. Preferably, works should be discontinued in advance of possible rainfall to allow the product to cure and be rainproof.
A curing membrane subject to rainfall is only aesthetically damaged. Rainfall can cause pits in the membrane but the quality of the membrane is not affected. These pitted areas should be topped off accordingly to satisfy the aesthetics of the system.

3.3.3) Hard Wearing Top Coat and Walkways

FASTCOAT Protection Coat;

LRS Seamless Waterproofing Systems FASTCOAT protective coat is a single component polyurethane coating with UV colour stability, this is only required where colour pigmentation is required for the whole life of the system (decorative details etc.). It has excellent chemical and abrasion resistance and forms an extremely durable top coat for the standard FASTCOAT system. The FASTCOAT Protection Coat can be tailored to system requirements with clear, pigmented or skid deterrent system options.

LRS Seamless Waterproofing Systems FASTCOAT Protection Coat as standard is a clear polyurethane. It must be pigmented with compatible RAL colours to be an effective barrier against UV rays. For anti-skid, system FASTCOAT Protection Coat can have pigmented quartz embedded in to the coating.

Before applying the FASTCOAT Protection Coating ensure the FASTCOAT (second layer) has completely cured. It must be completely clean, dust free and have no sitting water before application. If 14 days have passed between applications of FASTCOAT (second layer) and the proposed application of FASTCOAT Protection Coat, reactivate the surface as specified with PU Primer at 100g/m2 to activate the membrane. Mix FASTCOAT Protection Coat with a paddle mixer at a low rpm until completely homogenous. Leave to rest and let excess air disperse before application.

Hard wearing top coat:

For a UV Barrier FASTCOAT Protection Coat;

Pigmented FASTCOAT Protection Coat should be applied by brush or short pile roller at a typical coverage rate of 300g/m2 on to the FASTCOAT membrane.

Liquid Roofing Systems Ltd
Prees Green
Shropshire
SY13 2BN
Tel: 01948 841 877
Fax: 01948 841 854
Web: lrs-systems.co.uk

Compatible RAL pigments available;

Tile Red approx. RAL 8023
Red oxide (Dark Red).
Black
Beige RAL 1015
Blue RAL 5010
Blue RAL 5015
Green RAL 6001
Green RAL 6021
Beige RAL 1001
White (“Cool Roof”)
Grey RAL 7001
Grey RAL 7011

Mixing Ratio: FASTCOAT Protection Coat 20kg: 4kg Pigment

Anti-Skid walkway;

For an anti-skid pigmented protection walkway, mark out the desired walkways using appropriate tapes. Apply FASTCOAT Protection Coat by brush or short pile roller at a typical coverage of 200g/m².

Into the wet FASTCOAT Protection Coat broadcast pigmented quartz 0.7-1.2mm. While the coating is still wet, remove the tapes and then leave the coating to cure. Once fully cured sweep off any loose quartz, abrade the surface (depending the degree of anti-skid finishing required) and apply a further 200g/m² of FASTCOAT Protection Coat and leave to fully cure.

A second layer of 200 g/m2 of FASTCOAT Protection Coat may be required.

Cure times stated below are approximate. Specific onsite conditions may cause variations with cure times.

Liquid Roofing Systems Ltd
Prees Green
Shropshire
SY13 2BN
Tel: 01948 841 877
Fax: 01948 841 854
Web: lrs-systems.co.uk

Protection Coat and Walkways			
Container Size		4Kg	20Kg
Coverage rates (typical)	300g/m²	13m²	66m²
	Skid Deterrent or Pigmented Colodur system 2 coats each applied at 200g/m²	10m²	50m²
Typical Drying Times at 15ºC	Touch Dry	8hours	
	Minimum over coating	10 hours	
	Full Cure	7 days	

Image 3 Anti-Skid FASTCOAT Protection Coat maintenance walkway with red pigmented quartz.

Storage;

All materials must be stored undercover and storage areas must be kept between 5°C and 25°C. Materials should never be exposed to freezing conditions or excessive temperature changes.

Liquid Roofing Systems Ltd
Prees Green
Shropshire
SY13 2BN
Tel: 01948 841 877
Fax: 01948 841 854
Web: lrs-systems.co.uk

Rainfall;

If it begins to rain at any stage during application or if rainfall is imminent, stop work immediately. Reseal any open containers and store all equipment adequately to keep them dry.

Work should not be resumed until it has completely stopped raining and the surface to be coated is completely dry and free from any sitting water. Preferably, works should be discontinued in advance of possible rainfall to allow the product to cure and be rainproof.

A curing membrane subject to rainfall is only aesthetically damaged. Rainfall can cause pits in the membrane but the quality of the membrane is not affected. These pitted areas should be overcoated accordingly to satisfy the aesthetics of the whole system.

Tarmac Application;

Apply 1kg per m² over the tarmac substrate
Immediately Embed GRP reinforcement tap
Apply 1kg per m² over the tarmac substrate
Once cured apply 0.3ltr porosity sealer
Immediately apply 3kg quartz aggregate

3.4) Ancillary components

3.4.1) Primers & Treatment of the surface

3.4.1.1) Table of most suitable primers depending on the type of surface;

The role of a primer is to seal the porosity of the surface (over a porous surface) and to improve the adhesion mainly over a smooth and non-porous surface.

Good adhesion of a system is obtained by a combination of both Seamless Waterproofing Systems and mechanical adhesion (for example anchorage over a porous surface).

Mechanical adhesion over a gloss and smooth surface is always difficult to achieve, however can be improved by abrading that surface.

Liquid Roofing Systems Ltd
Prees Green
Shropshire
SY13 2BN
Tel: 01948 841 877
Fax: 01948 841 854
Web: lrs-systems.co.uk

SCENARIO (TYPE OF SURFACE)	EXAMPLE	RECOMMENDED PRIMER FOR FASTCOAT
Non porous surface. Rough surface	Old torch on membrane/ Asphalt	Normally not needed
Non porous surface. Smooth surface	Old PVC membrane. Old PU/Polyurea coating. Glass	Solvent + PU Primer
Completely dry porous surface.	Concrete	Porosity Sealer or Humidity Primer
Porous surface with slight moisture content (lower than 6%)	Concrete	Humidity Primer

Notes: This table is only for general guidance.

The most appropriate primer for each individual project depends on the type of surface, specifications and requirements of that project.

Adhesion tests are always recommended for each project. Compatibility between the primer and the surface material should be checked. (For example, Humidity Primer cannot be applied over a surface that was previously treated with hydrophobic additives).

Previous treatment of the surface is always recommended to increase the mechanical adhesion of the primer over the surface. Diamond grinding over concrete, abrade non-porous surfaces.

3.4.1.2) Porosity Sealer;

Porosity Sealer is a single component, solvent based low viscosity primer designed for use as a general-purpose primer for most well-dry porous substrates, normally concrete and porous cementitious surfaces. There is also a possibility to coat certain grades of PIR. Please refer to LRS Seamless Waterproofing Systems Technical Services for more details.

Porosity Sealer is a clear liquid with excellent levels of penetration and adhesion to substrates acting as a sealer/primer before subsequent FASTCOAT installation. It should be applied using a brush or short pile roller giving an even coating across the substrate. Take care to avoid excess application or product ponding in certain areas as cure times will be extended.

Liquid Roofing Systems Ltd
Prees Green
Shropshire
SY13 2BN
Tel: 01948 841 877
Fax: 01948 841 854
Web: lrs-systems.co.uk

Porosity Sealer		
Container Size	20 kg.	
Compatible substrate	Porous substrates Completely dry concrete	
Coverage rates (typical)	Smooth porous 200 g/m^2	100m^2 / 20 kg drum
	Rough porous 300 g/m^2	65 m^2 / 20 kg drum
Typical Drying Times at 15ºC	Touch Dry	5 hours
	Minimum over coating	6 hours
	Full Cure	7 Days

Substrates must always be clean and dry before application of the Porosity Sealer. Do not apply if it is raining or rain is imminent. Porosity Sealer should not be applied to surfaces when the temperature is below 5ºC and below the dew point. The temperature must be 5ºC and rising. Application of the primer should not take place when wet conditions prevail, or when condensation is present or will be present on the substrate during application. Typically surfaces should be high pressure washed with a biocide wash, free from contaminants and dry.

Porosity Sealer should be applied on smooth porous substrates such as levelled concrete and smooth cementitious materials etc at minimum 200 g/m2. Substrates that are rough or highly porous require 300 g/m¬2. If the coating, when dried does not have a gloss appearance, it means that the porosity of the surface is still not fully sealed and a further layer of resin (150 g/m2 is required).

The FASTCOAT (base coat) can be applied while the primer is slightly tacky but not wet. The liquid should not lift from the substrate on touch or underfoot.

Porosity Sealer cannot be used to prime non- porous substrates such as glass, metal, single ply, EDPM etc and cannot be used to prime damp/wet porous substrates such as Damp concrete & wet wooden decks etc
Porosity Sealer has a strong odour and can be irritable to bare skin; therefore, the appropriate PPE should be worn. Product should be stored in the original containers at temperatures between 5ºC - 30ºC. Product shelf life: 1 year, from date of manufacture.

Liquid Roofing Systems Ltd
Prees Green
Shropshire
SY13 2BN
Tel: 01948 841 877
Fax: 01948 841 854
Web: lrs-systems.co.uk

3.4.1.3) Humidity Primer;

Humidity Primer is two component water based epoxy primer, used to prime and seal porous substrates including highly porous asphalt, concrete and wooden surfaces, prior to the application of FASTCOAT (base coat).

Humidity Primer is made up of both resin & hardener; once both components are mixed together the primer will change to a white liquid. Designed to seal any pores within the surface of the substrate.

The Humidity primer is compatible with moisture contents on the concrete surface up to 6%. Over a concrete surface with larger content of moisture or with risk of negative pressures, the application of 2 kg/m2 of the epoxy-cement resin, should prevent negative vapour drive from rising through the pours.

Once both components of the Humidity primer are mixed they can be applied via manual roller or brush application, ensuring even distribution of the primer to the surface.

Humidity Primer cures in 12 hours' subject to ambient conditions and forms a hard-clear glaze on the surface. Apply the FASTCOAT (base Coat) onto the primed substrate no later than 48 hours after the primer has cured (white coating has become clear).

If the primer is going to be left exposed for longer than 48 hours, broadcast dry 0.1-0.3mm silica sand at 0.5kg/m2 into the wet primer during primer application and allows curing as normal.

Humidity Primer		
Container Size	5 kg	18 kg
Compatible Substrates	Porous substrates Dry / Damp concrete / Aged Asphalt/ Plywood	
Coverage rates (typical)	300g/m^2	
Typical Drying Times at 15ºC	Minimum over coating	12 hours
	Maximum over coating	48 hours

Humidity primer should not be applied to surfaces when the temperature is below 5ºC and below the dew point. The temperature must be 5ºC and rising.

Application of the primer should not take place when wet conditions prevail, or when condensation is present or will be present on the substrate during application. All surfaces must be sufficiently prepared and cleaned prior application of the Humidity primer.

Liquid Roofing Systems Ltd
Prees Green
Shropshire
SY13 2BN
Tel: 01948 841 877
Fax: 01948 841 854
Web: lrs-systems.co.uk

Typically surfaces should be high pressure washed with a biocide wash, free from contaminants and dry.

Appropriate PPE should be worn when Humidity Primer is applied. Product should be stored in the original containers at temperatures between 5ºC - 30ºC.

Product shelf life: 1 year, from date of manufacture

Once the Humidity Primer has been opened both components (resin & hardener) must be mixed and applied to the substrate immediately.

3.4.1.4) PU Primer;

PU Primer is a single component, low viscosity primer/activator designed for priming non-porous surfaces such as exposed metal, PVC, old polyurethanes and polyurea coatings, glass, GRP... before proceeding with the STANDARD FASTCOAT system.

PU Primer is a clear liquid, applied manually via roller or brush as a wet film to the surface. The solvents evaporate leaving a matrix of molecules activating the surface of the substrate. After the primer appears dry, apply the FASTCOAT base coat.

PU Primer		
Container Size	20 kg	
Compatible Substrates	Non-Porous substrates Metal/glass/ PVC/old polyurethane and polyurea coatings/GRP	
Coverage rates (typical)	100 g/m^2	200 m^2 / 20 kg drum
Typical Drying Times at 15ºC	Touch Dry	15 minutes
	Minimum over coating	30 minutes
	Maximum over coating	4 hours

PU primer should not be applied to surfaces when the temperature is below 5ºC and below the dew point. The temperature must be 5ºC and rising. Application of the primer should not take place when wet conditions prevail, or when condensation is present or will be present on the substrate during application.

Liquid Roofing Systems Ltd
Prees Green
Shropshire
SY13 2BN
Tel: 01948 841 877
Fax: 01948 841 854
Web: lrs-systems.co.uk

All surfaces must be sufficiently prepared and cleaned prior application of the PU primer as per LRS Seamless Waterproofing Systems site preparation recommendations.

Typically surfaces should be high pressure washed with a biocide wash, ensuring it is free from contaminants.

Ensure any oxidation layers are removed before applying the primer. Abrading the surface with a wire brush for example can also help give a mechanical key.

Application of PU Solvent, prior to the PU Primer, will help to activate some non-porous surfaces, and so help to increase the adhesion of the system.

Do not apply PU Primer during rain or when rain is predicted.

3.4.1.5) PU Solvent;

FASTCOAT PU Solvent is a single component, combination of strong organic solvents manufactured specifically for compatibility with FASTCOAT. PU Solvent can be used either as a thinner for FASTCOAT (viscosity modifier, maximum at 10%) or to clean and activate certain non-porous substrates prior to the application of the PU Primer.

PU Solvent is a clear liquid, after cleaning the substrate thoroughly with detergent/ and biocide, the PU Solvent is applied manually by rubbing with a clean cloth or brush and is to be worked into the surface. The solvent helps to finally clean the surface enhancing dirt removal. Once applied the solvent evaporates leaving a clean surface.

When using PU Solvent as a surface activator, apply manually with a clean cloth or brush and work into the surface. Once the solvent has evaporated, immediately proceed with the PU PRIMER application.

PU Solvent should not be applied to surfaces when the temperature is below 5ºC and below the dew point. The temperature must be 5ºC and rising. Application of the PU solvent should not take place when wet conditions prevail, or when condensation is present or will be present on the substrate during application. If using PU Solvent as an activator, all surfaces must be sufficiently prepared and cleaned prior application of the PU Solvent as per LRS Seamless Waterproofing Systems site preparation recommendations. Typically surfaces should be high pressure washed with a biocide wash, ensuring it is free from contaminants.

Do not apply PU Solvent during rain or when rain is predicted.

Liquid Roofing Systems Ltd
Prees Green
Shropshire
SY13 2BN
Tel: 01948 841 877
Fax: 01948 841 854
Web: lrs-systems.co.uk

Polyester Reinforcement embedded in to FASTCOAT

Storage;

100GSM Polyester Reinforcement must be stored under cover and in the dry. The rolls are supplied in a plastic film and then in a cardboard box. Do not get the Polyester wet prior to or during installation.

3.4.2.3) Butyl Tape (self-adhesive bond bridging tape)

Bond Bridging Tape is a non-bituminous tape to bridge all gaps, joints, weak points etc. where movement is likely to occur. The bridging tape self-adhesive backing should be pressed firmly onto the substrate surface and care should be taken to ensure that the edges are firmly pressed down flush with the surface profile.

Butyl Tex (Self-adhesive bond bridging tape)		
Roll Size	20 m x 0,15 m	20 m x 0.075m
Coverage rates	20 linear metres/roll	20 linear metres/roll

Apply onto clean dirt free substrates that are dry.

3.5) Installation of the waterproofing system

Ensure that all surfaces have been suitably prepared and are clean and dry. Apply primers where required. Form all detail areas before applying FASTCOAT on the main area.

Liquid Roofing Systems Ltd
Prees Green
Shropshire
SY13 2BN
Tel: 01948 841 877
Fax: 01948 841 854
Web: lrs-systems.co.uk

3.5.1) FASTCOAT (base coat, first layer)

Cut the Reinforcement Tape to the required length and width for the proposed detail about to be completed. Consider the wind when cutting the Reinforcement Tape so as not to leave unmanageable sections of tape.

Detailing –

Apply FASTCOAT to the detail area ensuring works are progressed to the point of egress. Immediately lay the Polyester Matting into the wet coating and begin to embed with a suitable roller.

Use a loaded roller to ensure full saturation of the reinforcement. Coverage rates are governed by the substrate. Refer to the specification and/or LRS Seamless Waterproofing Systems technical department for more details.

Overlaps between strips of Reinforcement Tape must be at least 50mm with feathered edges. Ensure there is sufficient material to saturate these overlap areas.

Keeping the container warm at room temperature will assist with the application and coverage rates of the embedment coat. Cold containers will make the product thicker and more difficult to apply and therefore a reduction in coverage rate will occur.

Once the detail areas are complete, begin installation on to the main roof area. Ensure overlaps onto the existing reinforced FASTCOAT sections are by at least 50mm. Apply a layer of FASTCOAT and embed into this the Polyester Reinforcement. Apply additional material where required.

Insufficient coverage of the FASTCOAT material may make it difficult to embed the Polyester. Flooding of the area may cause the Polyester to tent.

Liquid Roofing Systems Ltd
Prees Green
Shropshire
SY13 2BN
Tel: 01948 841 877
Fax: 01948 841 854
Web: lrs-systems.co.uk

Monitor application and check for fish mouths or pin holing and apply more product where required. Allow to cure in accordance with LRS Seamless Waterproofing Systems Technical Services recommendations prior to application of the top coat. Once the membrane has cured, check for pinholes and any surface defects. Fish mouths should be trimmed back and lightly abraded to provide an even surface prior to application of the top coat.

3.5.2) FASTCOAT (second layer)

After application of the base coat, ensure full coverage and encapsulation of the reinforcement in accordance with LRS Seamless Waterproofing Systems Technical Services and the specification for that project. Any defective or loose areas should be cut out and replaced with new material to ensure the coating is fully bonded to a sound substrate.

Prepare the specified FASTCOAT (second layer) and apply to the detail areas first before the main area. Ensure upstands are a minimum of 150mm above the finished roof level.

Apply the top coat at the coverage rate specified by LRS Seamless Waterproofing Systems; run a spike roller slowly over the freshly laid FASTCOAT to burst any bubbles and release any trapped gas before the FASTCOAT skins over.

Use volume to area calculations to work out the coverage per drum prior to application. This will ensure the correct coverage rate is achieved. Wet thickness readings will also achieve the same result but is limited to the area chosen to test.

Check all details and main roof areas for snags and treat accordingly. Any pinholes should be treated with extra product leaving a smooth homogenous finish. Allow to cure in accordance with LRS Seamless Waterproofing Systems Technical Services recommendations.
Designated walkways should be marked out and installed only after the top coat has cured. Ensure the membrane has reached full cure before reinstating any proprietary components or plant work upon the roof.

All liquid details must be suitably terminated with suitable materials such as termination bars, flashings, trims etc. Refer to the specification or LRS Seamless Waterproofing Systems Technical Services for details.

Liquid Roofing Systems Ltd
Prees Green
Shropshire
SY13 2BN
Tel: 01948 841 877
Fax: 01948 841 854
Web: lrs-systems.co.uk

3.6) Snagging of the systems

Insufficient Coverage Rate;

Insufficient coverage rate of the embedment coat has resulted in sufficient saturation of the Polyester Reinforcement. The coverage of FASTCOAT has not satisfied the specified amount and more material must be applied. This ensures full encapsulation of the reinforcement preventing any loose fibres.

Additional coverage of the specified FASTCOAT base coat should be applied prior to the application of any top coats.

Sagging product on upstands;

Sagging & pooling of the product at upstands is not desirable, trapped gases can cause a spongy membrane; this is not detrimental to the system provided there is still adequate saturation of the reinforcement on the upstand itself. This can be caused by surplus application of the product prior to laying the Polyester or post Polyester installation. Extended cure times in colder temperatures will also allow the product more time to sag.

Apply a tack coat of FASTCOAT rather than a thick coat. Tack the Polyester onto the upstand and the resin will start to saturate the tape. Using a loaded roller, overcoat the Polyester evenly until full saturation, taking care not to apply excess product which could later sag. Monitor the formation of the details periodically. If any areas appear to be sagging during the curing process, treat by rolling the material back across a larger surface area of the upstand.

Liquid Roofing Systems Ltd
Prees Green
Shropshire
SY13 2BN
Tel: 01948 841 877
Fax: 01948 841 854
Web: lrs-systems.co.uk

Pinholes;

Pinholes can be rectified by the application of additional top coat. Ensure the area is clean and dry before application.

The formation of pinholes can be minimised by ensuring the material is left to settle after mixing.

Installation under rising temperatures can also increase the likelihood of pinholes. If required, pass a spiked roller over affected areas while the coating is still wet, this will help release any trapped air.

Fish mouths;

Fish mouths occur through over rolling of the reinforcement with the base coat. On application, if these areas seem to appear, break down the fibres with the edge of the roller and overcoat accordingly with suitable product. Continuous overworking will make the area worse.

If an area has cured, the area must be cut out and repaired with additional material. Individual fish mouths can just be trimmed back and gently abraded to leave a smooth surface prior to the application of the top coat.

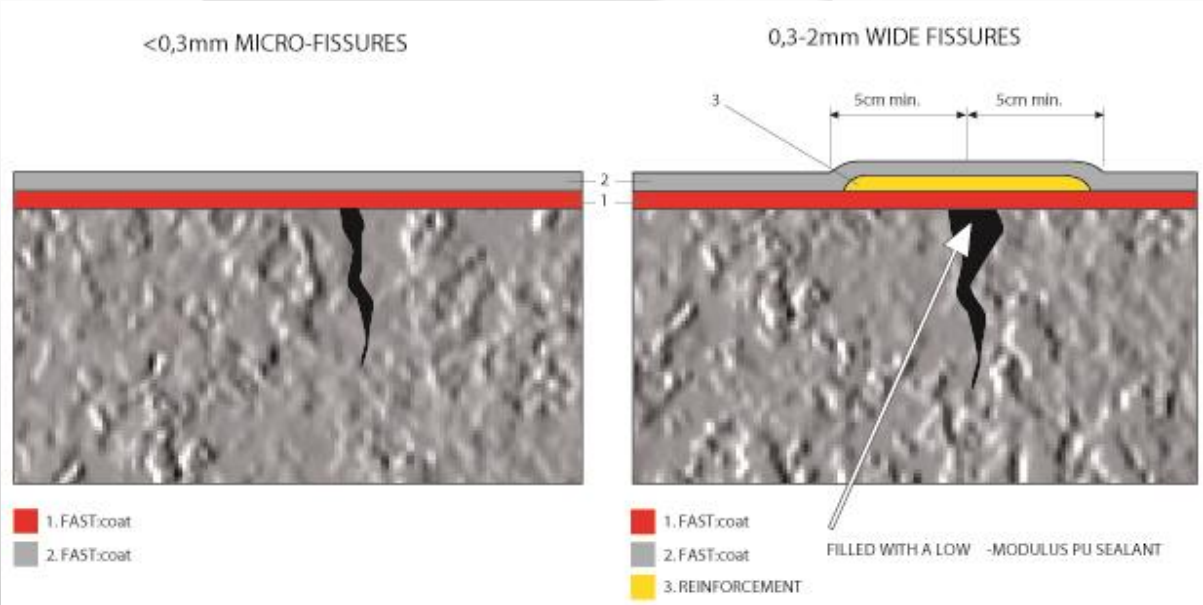

Liquid Roofing Systems Ltd
Prees Green
Shropshire
SY13 2BN
Tel: 01948 841 877
Fax: 01948 841 854
Web: lrs-systems.co.uk

3.7) HEALTH & SAFETY;

Material Safety Data Sheets are available upon request; please contact LRS Seamless Waterproofing Systems UK Ltd.

3.8) TECHNICAL SUPPORT;

Technical advice is available from the LRS Seamless Waterproofing Systems UK Technical Service at:

Telephone: 01948 841 877
Email: technical@lrs-systems.co.uk

Installation manual is subject to change; please apply to LRS Seamless Waterproofing Systems UK for the updated version prior to commencement of the project.

LRS Seamless Waterproofing Systems undertakes continual product development and therefore all product data and information is subject to change without notice. Customers are responsible for ensuring and checking that the product is suitable for the proposed application and conditions for use are appropriate and meet the required standards. Please refer to the LRS Seamless Waterproofing Systems Terms and Conditions.

Revision TS-JAN-17